Technical data sheet

Battery motor FBM 4100

Battery motor FBM 4100

Special features:

- 420 watts of power
- Batch filling function
- Activable dry-run protection
- Energy-efficient and maintenance-free thanks to BLDC motor technology
- 10-stage speed control
- LED drum lighting
- Compatible with drum pumps from other manufacturers
- Pro version - interface connection for e.g. external start/stop button or connection of peripheral devices such as level gauge, flow meter

Motor type	Motor bearing	Nominal power [W]	Rotational speed [min⁻¹]	Rotational speed control	Permissible ambient temperature during operation [°C]	Permissible ambient temperature during storage [°C]	Viscosity max. [mPas]	Protection class (with protective cover)	Weight motor with battery and protective cover [kg]	Weight without battery [kg]
brushless	ball bearing	420 W ventilated version	5.500 - 12.250	in 10 % increments	0 to +40	0 to +30	5.000	IP24	2,8	1,6
		260 W closed version						IP44		

Battery B40-4100

Special features:

- SEALED: dust and water jet protected according to protection class IP57
- Integrated short-circuit protection - detects water contact and switches off the electronics
- PLUS technology: more power with a more compact, lighter design
- Current charge status via 3-stage LED display
- Battery management system (BMS) for optimal battery monitoring
- No memory effect thanks to high-quality Li-ion cells

Design	Nominal voltage [V]	Nominal capacity [Ah]	Permissible ambient temperature during operation [°C]	Permissible ambient temperature during storage [°C]	Dimensions [mm] L x W x H	Weight [g]
Li-Ion	18	4	0 to +50	0 to +30	133 x 85 x 55	580

Charger BCH-4100

Special features:

- Parallel charging of 2 x 18 V batteries: saves space and ensures fast, high availability and uninterrupted operation
- Short charging times thanks to fast charging technology
- Permanent battery monitoring for optimal charging
- Reactivation of deeply discharged batteries through refresh mode
- Maximum safety thanks to intelligent charging management

Nominal voltage [V]	Mains frequency [Hz]	Charging time [min]	Permissible charging temperature range [°C]	Permissible ambient temperature during storage [°C]	Power cord length [m]	Plug type	Dimensions [mm] L x W x H	Weight [g]
220 – 240	50 – 60	75	0 to +30	0 to +40	1,5	CEE 7/16	220 x 185 x 70	830
100 – 120						NEMA 1-15 P		

Performance data

Battery motor FBM 4100

Delivery volume with one battery charge

Configuration	Speed [min^{-1}]	Totel volume [l]	Delivery time Q [l/min]	Time [min] max.
Pump F 430 PP-50/38 (measured directly at the pressure connection)	100 % = 12.250 80 % = 10.000 50 % = 6.250	4.028 5.600 11.000	212 175 110	19 32 100
Pump F 430 PP-40/33 2 m hose DN 19 **without hand nozzle**	100 % = 12.250 80 % = 10.000 50 % = 6.250	1.804 2.244 4.275	82 68 45	22 33 95
Pump F 430 PP-40/33 2 m hose DN 19 **hand nozzle PP**	100 % = 12.250 80 % = 10.000 50 % = 6.250	1.184 1.792 2.970	64 56 33	18 32 90

Performance chart

FBM 4100 ventilated
(FBM 4100 Core; FBM 4100 Pro)

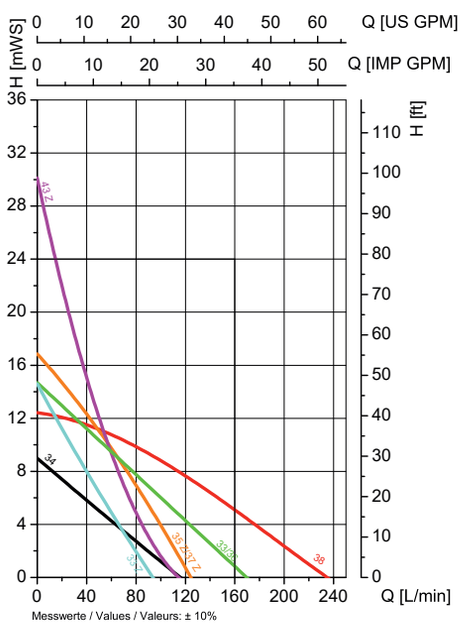

FBM 4100 closed
(FBM 4100 Core A; FBM 4100 Pro A)

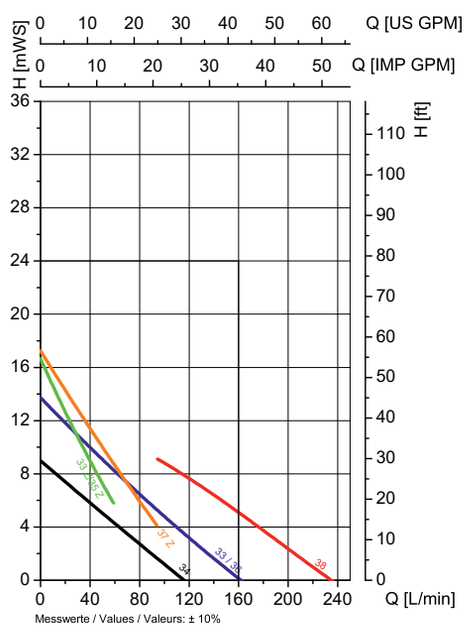

Dimensions [mm]

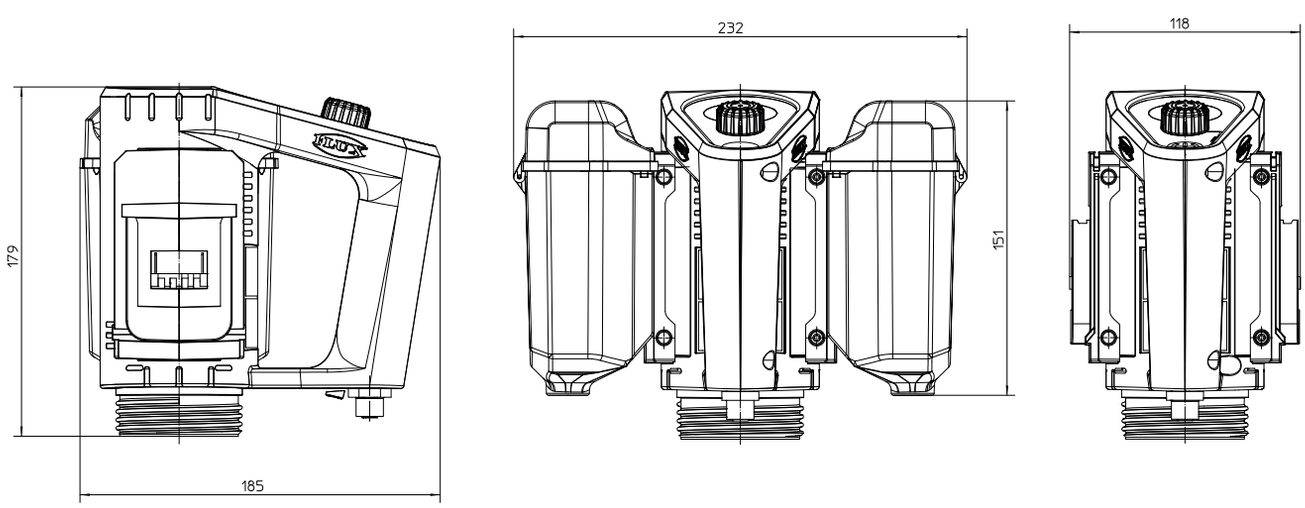

Ventilation concepts

Battery-motor FBM 4100

Ventilated versions:
FBM 4100 Core
FBM 4100 Pro

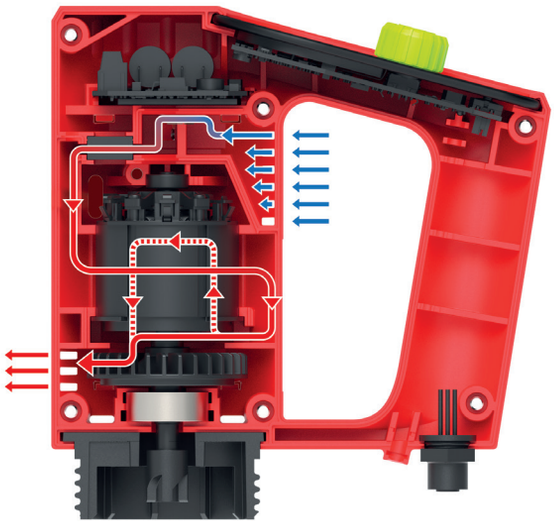

Closed versions:
FBM 4100 Core A
FBM 4100 Pro A

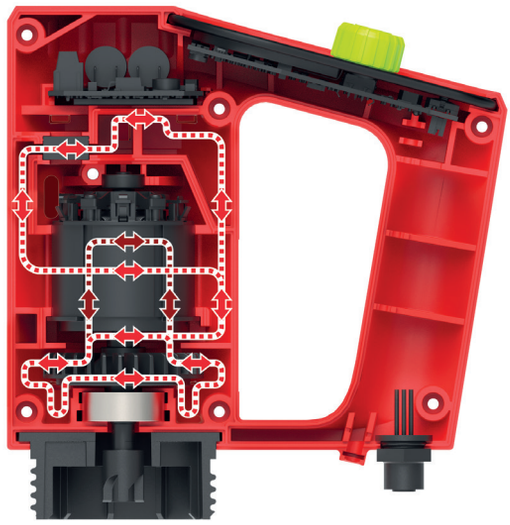

FBM 4100 PRO / FBM 4100 PRO A
with interface connection

① External I/O button
② PNP/NPN against GND (PIN 5) and/or against 24 V (PIN 4)
③ S1 FLUXTRONIC®
④ 24 V supply for external devices (100 mA)
⑤ GND

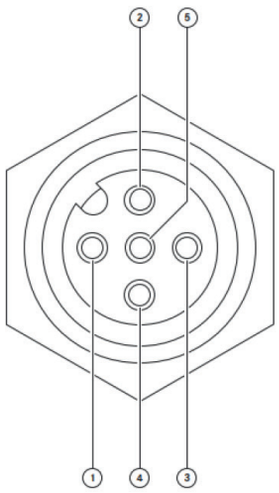

Pro version can be combined with:

- External start/stop buttonr - e.g. on hand nozzle
- FLUXTRONIC® evaluation electronics - in conjunction with flow meters
- other 24 V peripheral devices such as clip-on flow meters, level meters, or other devices that can be operated with the motor. By outputting NPN or PNP signals, these can start and stop the motor externally..

Part numbers

Battery motor FBM 4100 and accessories

Battery motor FBM 4100 and accessories

Motor incl. 2x 18 V, 4 Ah batteries and charger 220-240 V, 50-60 Hz	Part no.
FBM 4100 Core	10-401 00 004
FBM 4100 Pro	10-401 00 005
FBM 4100 Core A	10-401 00 006
FBM 4100 Pro A	10-401 00 007

Motor incl. 2x 18 V, 4 Ah batteries – without charger	Part no.
FBM 4100 Core	10-401 00 008
FBM 4100 Pro	10-401 00 009
FBM 4100 Core A	10-401 00 010
FBM 4100 Pro A	10-401 00 011

Motor without batteries, without charger	Part no.
FBM 4100 Core	10-401 00 001
FBM 4100 Pro	10-401 00 000
FBM 4100 Core A	10-401 00 003
FBM 4100 Pro A	10-401 00 002

Accessories	Part no.
Battery B40-4100 18 V, 4 Ah SEALED	10-401 02 003
Charger BCH-4100 220-240 V, 50-60 Hz	10-401 02 001
Battery protective cover	10-401 05 014
Adapter for connection to other pumping stations	10-959 06 284

Connection cable for FBM 4100 Pro/Pro A	Part no.
for connecting FBM 4100 with start/stop button; 3 m	10-401 06 016
for connecting FBM 4100 with flow meter FMC/ FMO; 0,5 m	10-401 06 015
for connecting FBM 4100 with other peripheral devices; 3 m	10-401 06 013

Pump kits consisting of FBM 4100 Core incl. 2x 18 V, 4 Ah batteries, charger 220-240 V, compression gland	Part no.
with F 430 PP-40/33-1000, 2 m PVC hose line, hand nozzle PP	10-401 40 010
with F 430 PP-40/33-1200, 2 m PVC hose line, hand nozzle PP	10-401 40 012
with F 430 AL-41/38-1000, 2 m mineral oil hose line, hand nozzle AL	10-401 10 010
with F 430 AL-41/38-1200, 2 m mineral oil hose line, hand nozzle AL	10-401 10 012

TD_FBM 4100 / 10-005 83077 / 0126

FLUX-GERÄTE GMBH
Talweg 12 · D-75433 Maulbronn
Tel +49 7043 101-0 · Fax +49 7043 101-444
info@flux-pumpen.de · www.flux-pumps.com